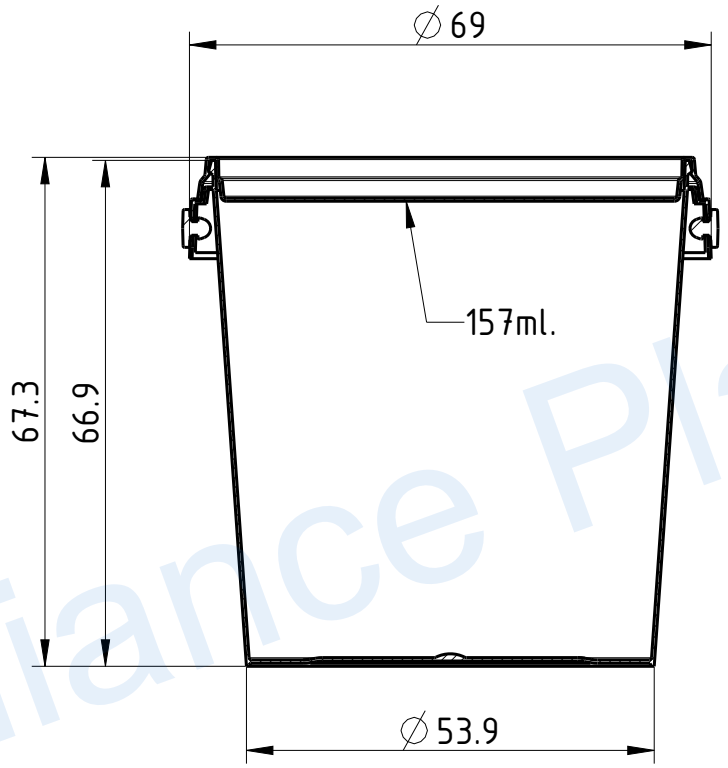

Alliance Plast

Weight container: 6.9 g.
Weight lid: 2 g.
Weight handle: 0.5 g.

					Draving Nr.			
					Name			
Ch	Rew	Dokum Nr	Signature	Data				
Design by					∅69 155ml.			
						Qty.	Scale	Sheet
						–	1:1	1/1
					Material	HRC		
								A4