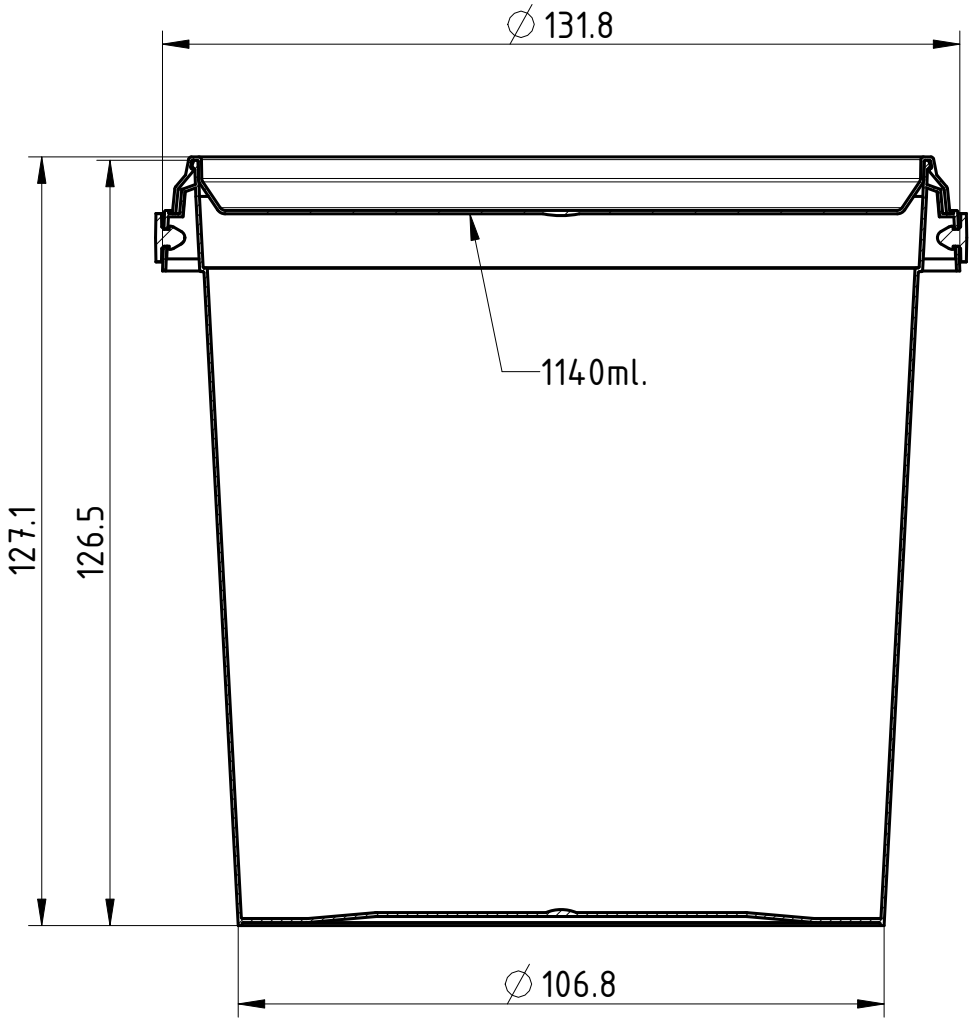

Weight container: 34.4 g.
Weight lid: 9.5 g.
Weight handle: 1.6 g.

					Draving Nr.			
					Name			
Ch	Rew	Dokum Nr	Signature	Data				
Design by		Zolojedov		20.01.21	∅131 1100ml.			
						Qty.	Scale	Sheet
						–	1:1	1/1
					Material	HRC		
								A4