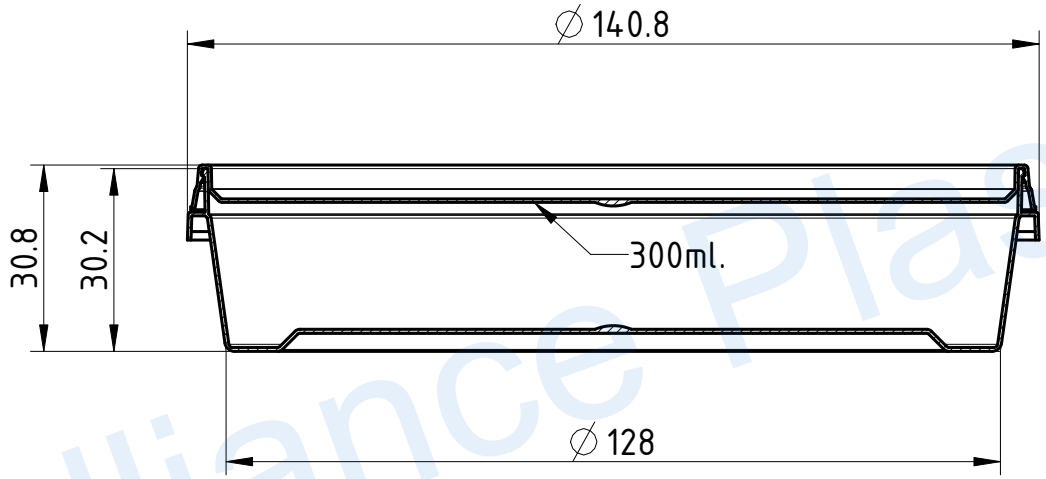

Alliance Plast

Weight container: 16.8 g.
Weight lid: 10.2 g.

					Draving Nr.			
					Name			
Ch	Rew	Dokum Nr	Signature	Data				
Design by		Zolojedov		29.05.20	∅140 300ml.			
						Qty.	Scale	Sheet
						–	1:1	1/1
					Material	HRC		
								A4